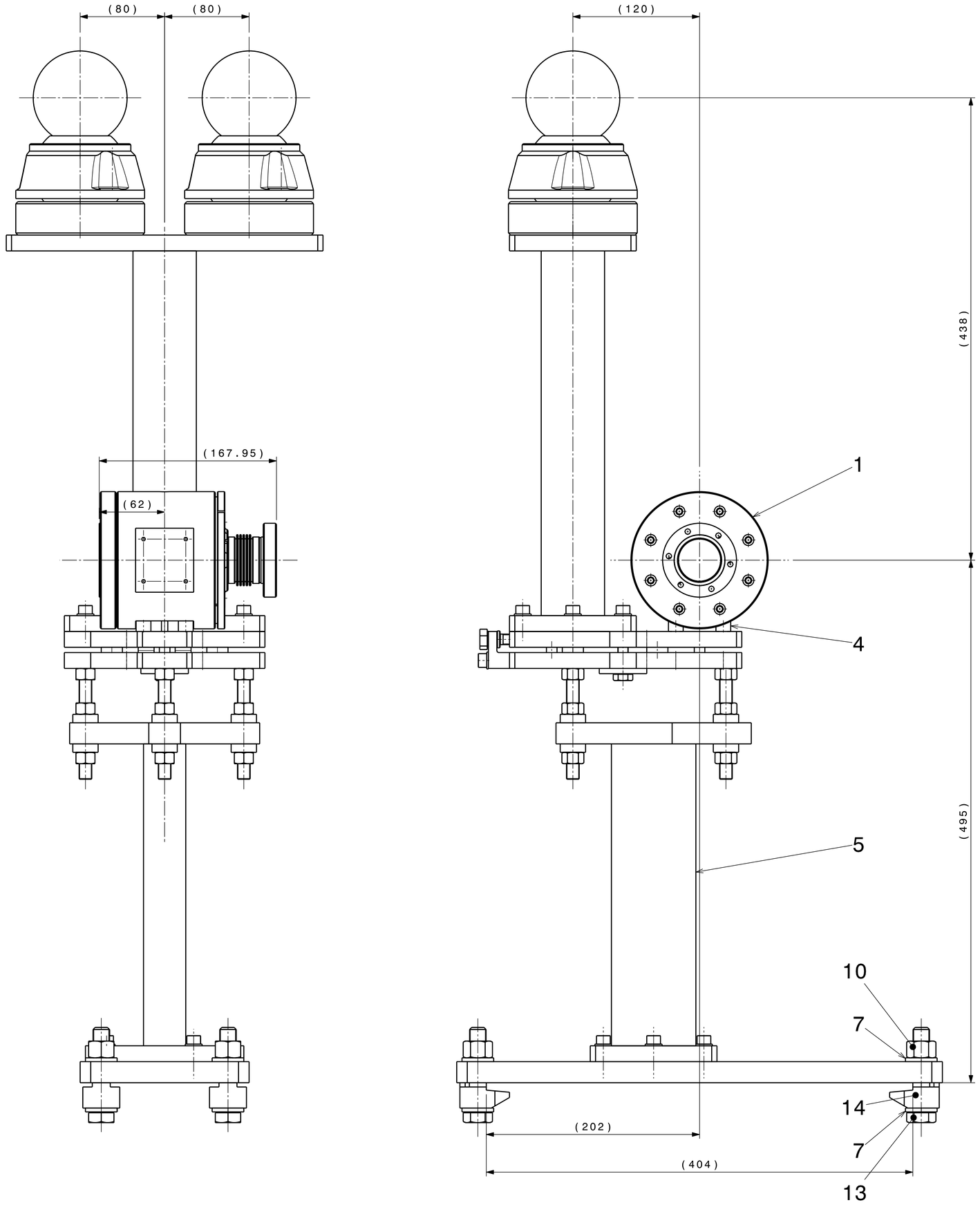

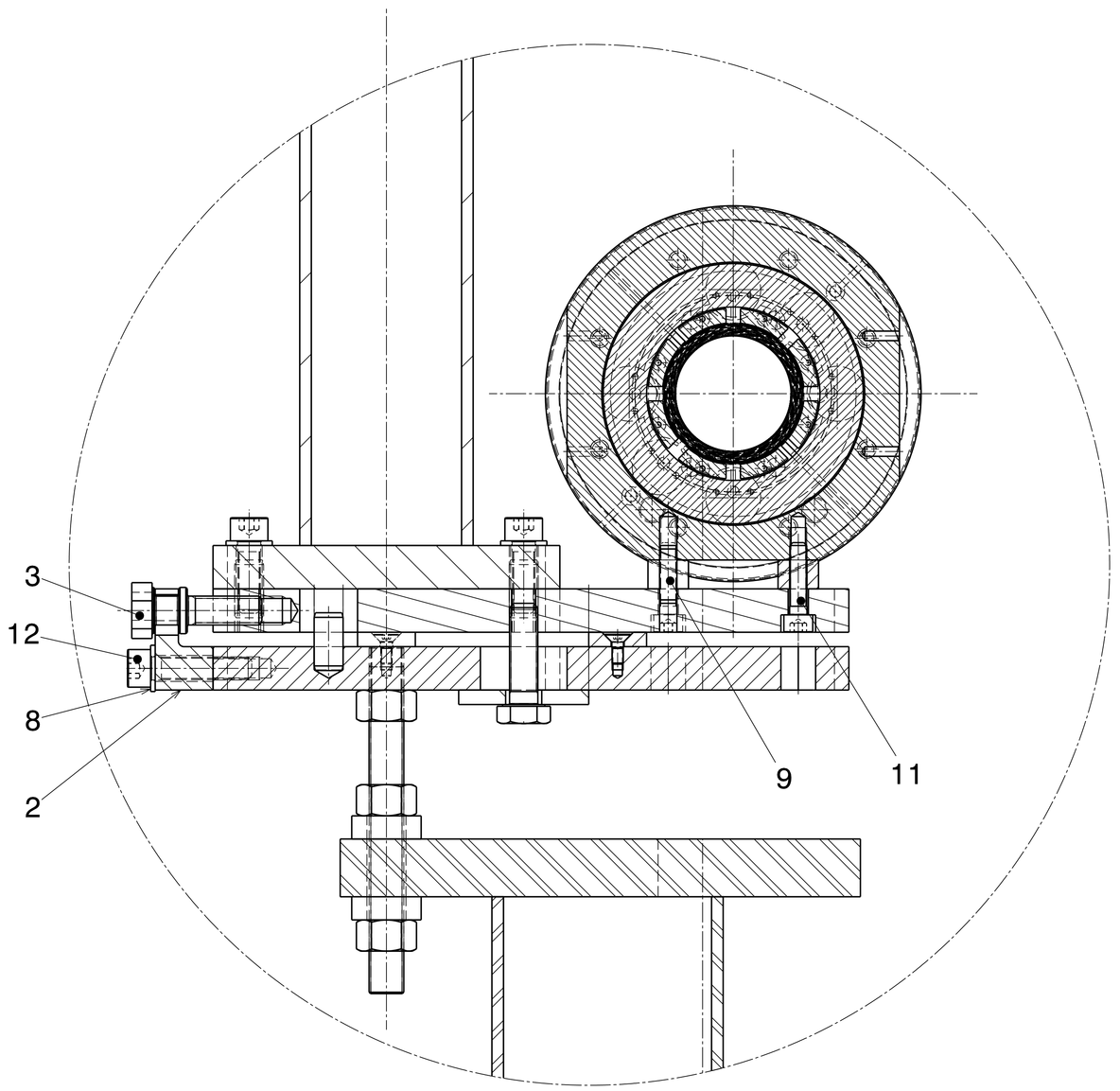

A-A
Scale : 1:1

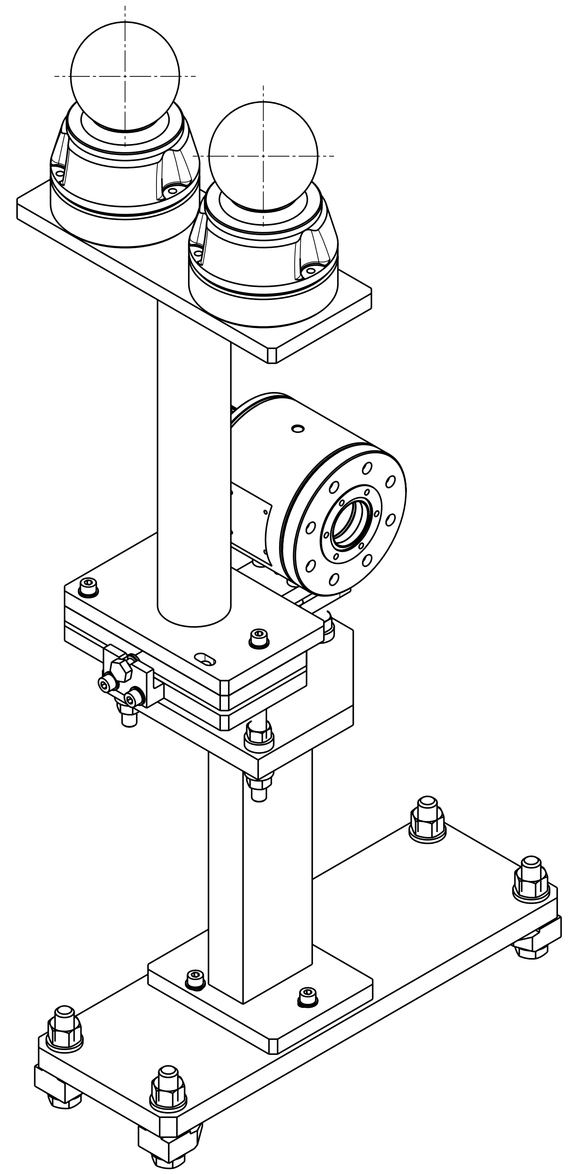

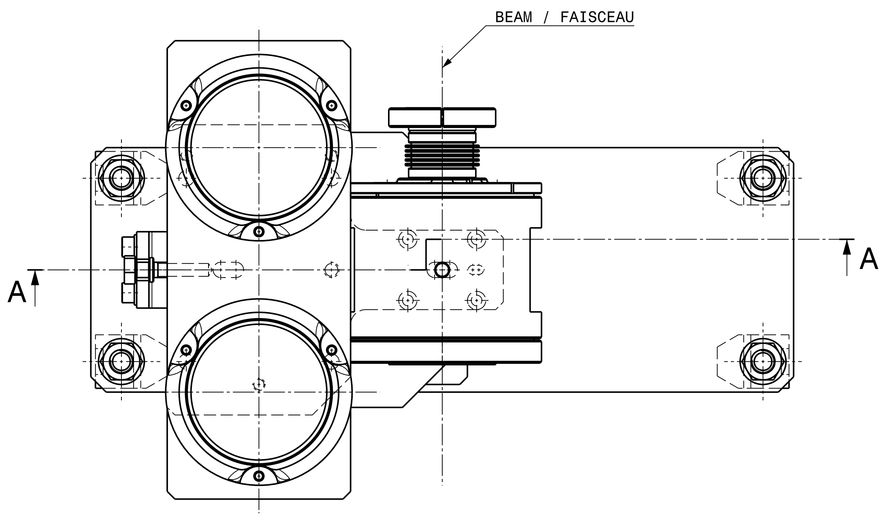

QUANT	DESCRIPTION	POS	MAT.	OBSERVATIONS	REF.CERN
4	CLAMP CRAPAUD	14		LINDAPTER, TYPE "B", B16M	
4	HEXAGONAL SCREW M16 x 80 VIS HEXAGONAL M16 x 80	13	ST. STEEL A4-316 AC. INOX A4-316		47.62.82 536.9
2	SOCKET HEAD SCREW M8 x 35 VIS CHC M8 x 35	12	ST. STEEL A4-70 AC. INOX A4-70		47.62.71 312.2
4	SOCKET HEAD SCREW M6 x 25 VIS CHC M6 x 25	11	ST. STEEL A4-70 AC. INOX A4-70		47.62.71 260.7
4	HEXAGONAL NUT M16 0.8d ECROU HEXAGONAL M16 0.8d	10	ST. STEEL A4-70 AC. INOX A4-70		47.43.77 160.4
2	REC.HARD.SILV.S.CY.PIN Ø6 x 20 GOUP. CYL. AC. AG TR.REC. Ø6 x 20	9	ST. STEEL 304L AC. INOX 304L		47.74.96 620.4
2	PLAIN WASHER M8 RONDELLE M8	8	ST. STEEL AC. INOX		47.78.15 008.8
8	PLAIN WASHER M16 RONDELLE PLATE M16	7	ST. STEEL AC. INOX		47.78.15 016.8
		6			
1	PICK-UP ASSEMBLY - SUPPORT ENSEMBLE PICK-UP - SUPPORT	5		CTFBIPU_0046	
4	INDUCTIVE PICK-UP ASSEMBLY - SPACER TK.= 10 MM ENSEBLE PICK-UP INDUCTIVE - ENTRETOISE EP.= 10 MM	4		CTFBIPU_0030	
1	SUPPORT ASSEMBLY QL-QS - SPECIAL SOCKET ENSEMBLE SUPPORT QL-QS - VIS SPECIALE	3		CTFMQUA_0026	
1	SUPPORT ASSEMBLY QL-QS - AJUSTMENT BLOCK ENSEMBLE SUPPORT QL-QS - PLOT DE REGLAGE	2		CTFMQUA_0021	
1	PICK-UP PICK-UP	1		CTFBIPU_0012	

ENS/ASS — S.ENS/S.ASS

CTF INDUCTIVE PICK-UP

PICK UP
ASSEMBLY 2
PICK UP
ASSEMBLAGE 2

ECHELLE SCALE 1:2

DES/DRA.	ACROTECNA	2007-07-26
CONTROLLED		
RELEASED		
APPROVED		

CTF\BIPU_O\CTFBIPU_0045

REMPLACE/REPLACES

NON VALABLE POUR EXECUTION
NOT VALID FOR EXECUTION

GAC - CTFBIPU_0045 SIZE 0 IND.

DESSIN NUMERIQUE, TOLERANCES SELON ISO 2768-mK-E
DRAWING NUMERIC, TOLERANCES ACCORDING TO ISO STANDARDS

Tolérances géométriques, sauf indication contraire
Geometrical tolerances, unless otherwise specified

ISO 2768-mK-E
ISO 13715

PROJECTION

ORGANISATION EUROPEENNE POUR LA RECHERCHE NUCLEAIRE
EUROPEAN ORGANIZATION FOR NUCLEAR RESEARCH

CERN

A CE DOCUMENT ET A SON CONTENU SONT ATTACHES DES DROITS DE PROPRIETE INTELLECTUELLE. IL NE DOIT PAS ETRE COPIE, REPRODUIT OU COMMUNIQUE A DES TIERS SANS AUTORISATION ECRITE DU CERN. TOUTE REPRODUCTION, MODIFICATION, TRADUCTION OU UTILISATION NON AUTORISEE SERA POUSSUIVIE EN DOMMAGES-INTERETS.