Coupe A-A

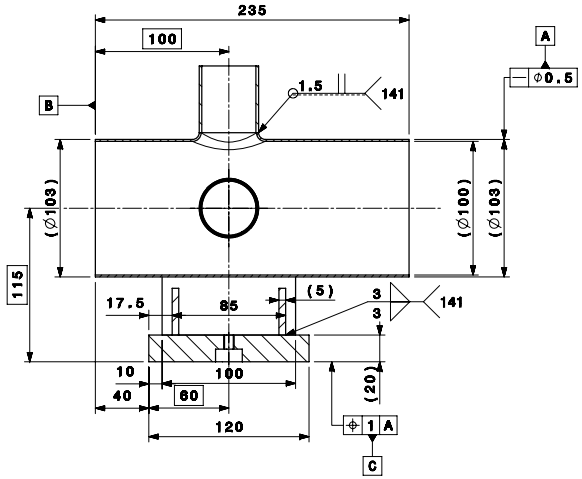

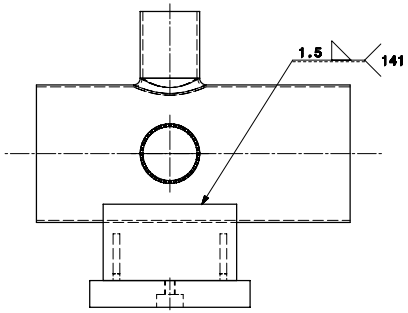

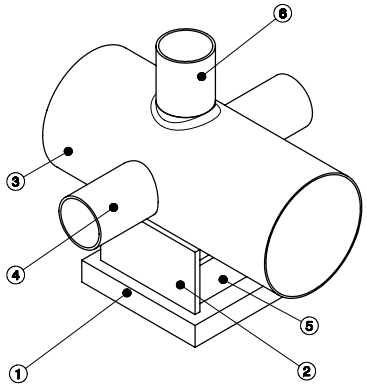

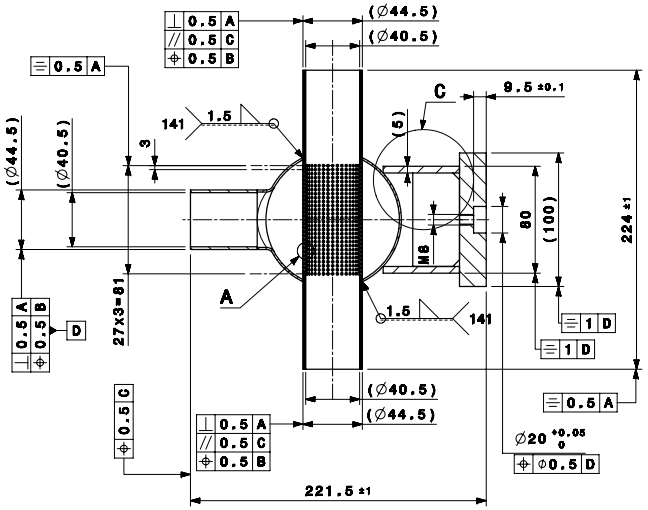

Coupe B-B

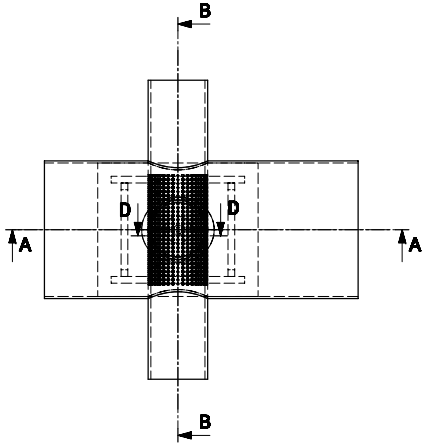

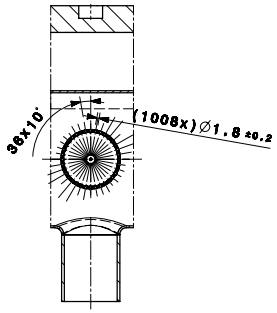

Coupe D-D

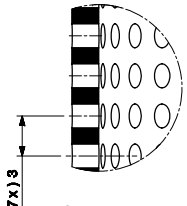

Détail A
Echelle : 5:1

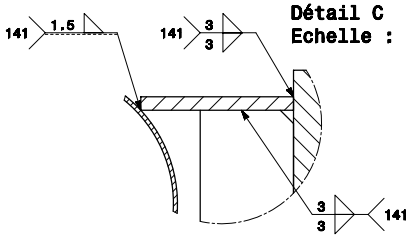

Détail C
Echelle : 1:1

Masse : 3.7kg
Mass

Ra 3.2

QUANT.	DESCRIPTION	POS	MAT.	OBSERVATIONS	REF.CERN
1	ROUND TUBE - Ø44.5 Th=2	6	X2 Cr Ni Mo 18-14-3		39.36.05
	TUBE ROND - Ø44,5 Ep= 2		(St.St. 316L)		685.0
2	SHEET TH. 5 mm	5	ST. STEEL 304L		44.58.32
	TOLE EP. 5mm		INOX 304L		050.0
1	ROUND TUBE - Ø44.5 Th=2	4	X2 Cr Ni Mo 18-14-3		39.36.05
	TUBE ROND - Ø44,5 Ep= 2		(St.St. 316L)		685.0
1	Round Tube Ø103/Ø100	3	X2 Cr Ni Mo 17-13-3		39.36.05
	Tube rond Ø103/Ø100		(St.St.316L)		800.0
2	SHEET TH. 5 mm	2	ST. STEEL 304L		44.58.32
	TOLE EP. 5mm		INOX 304L		050.0
1	FLAT BAR - 100 x 20	1	STAINLESS STEEL		44.57.02
	MEPLAT -100 x 20		304 L AISI		182.6

EMB/ASS CTFVGPUM0058 S.EMB/S.ASS CTFVGPUM0054

CTF3 VACUUM - GENERAL PUMPING

STAINLESS STEEL PUMPING POT
BODY PUMP
POT DE POMPAGE INOX
CORPS DE POMPE

DES/DRA.	B.FAVRAT	2007-08-23
CONTROLLED	N.CHRITIN	2007-10-19
RELEASED	R.RUBER	2007-10-19
APPROVED	-	-

SCHELLE SCALE 1:2

CTF\VGPUMD\CTFVGPUM0053

REMPLACE/REPLACES

RELEASED BY PROJECT ENGINEER | FOR EXECUTION | QAC – | CTFVGPUM0053 | SIZE 1 | IND. B

IND.	DATE	NOM/NAME	ZONE	MODIFICATION
B	2007-10-19	B. FAVRAT		Modif tube blinde + format A2 devient A1

TOLERANCES GEOMETRIQUES ISO 2768-mK-E
TOLERANCES DIMENSIONNELLES ISO 13715 JS-S-H
TOLERANCES ISO 1101 ZONE GENERALE
TOLERANCES ISO 1101 ZONE GENERALE
FINISH
MATERIAL
TRANSCRIPTION INTERDITE SANS AUTORISATION ECRITE DU CERN
REPRODUCTION INTERDITE SANS AUTORISATION ECRITE