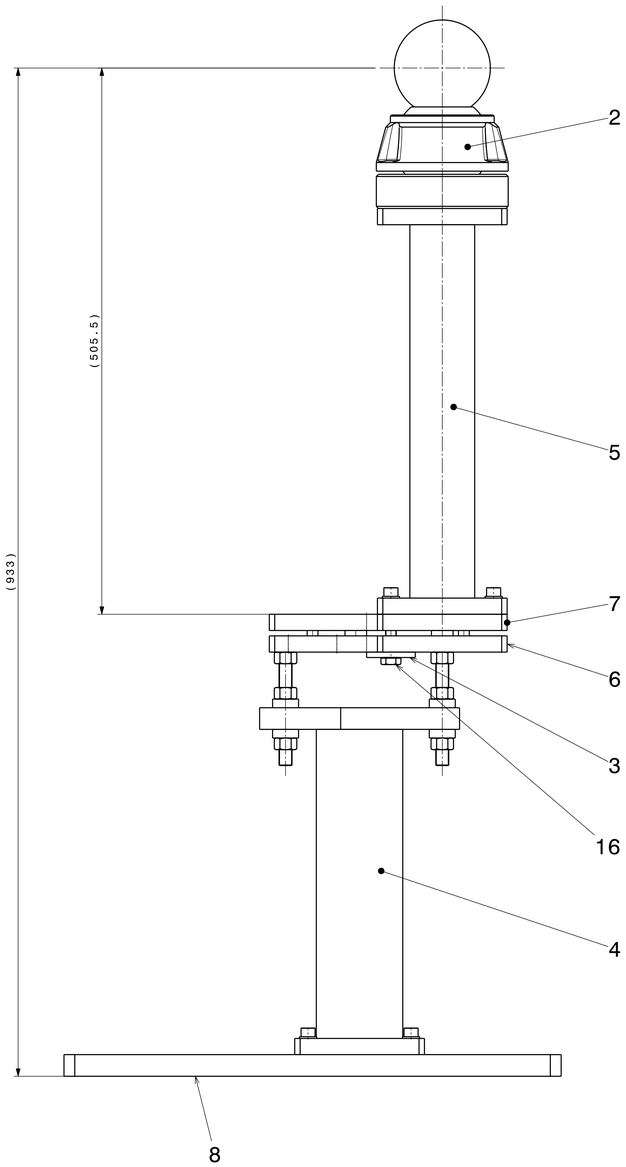

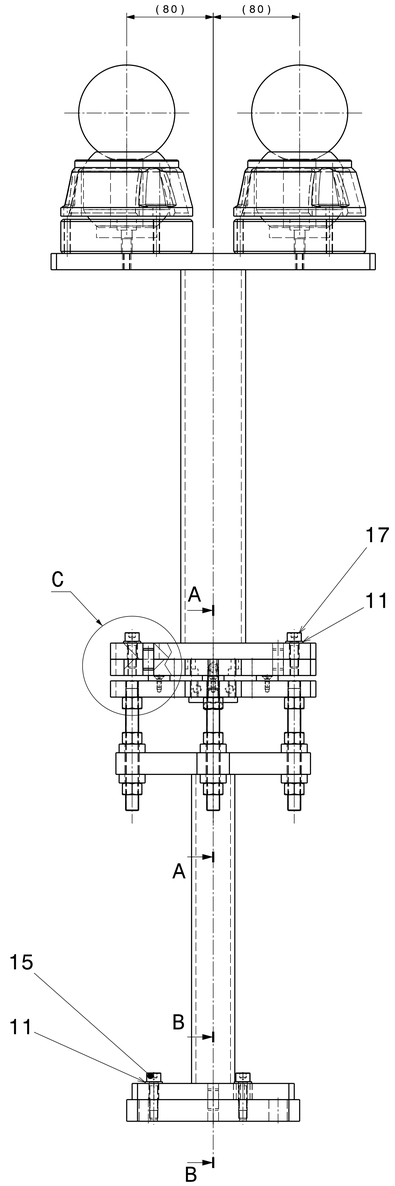

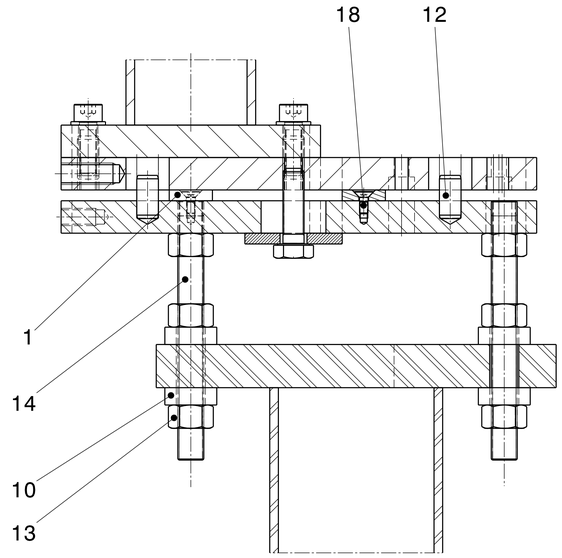

A-A
Scale : 1:1

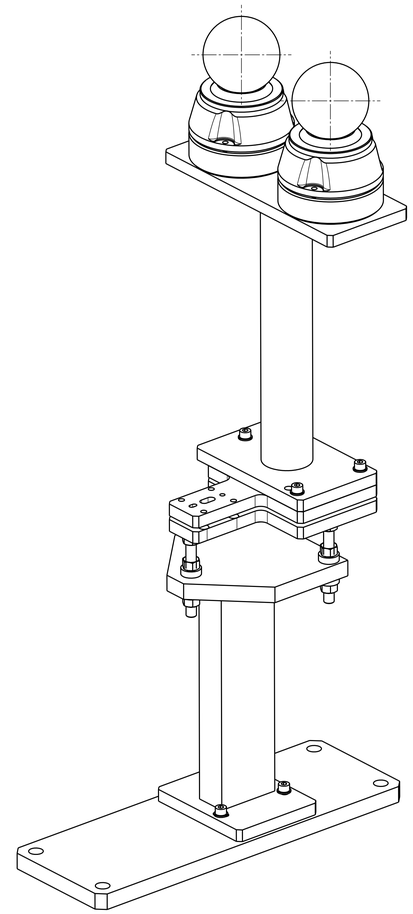

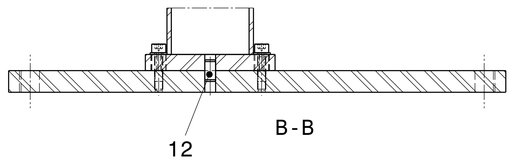

B-B

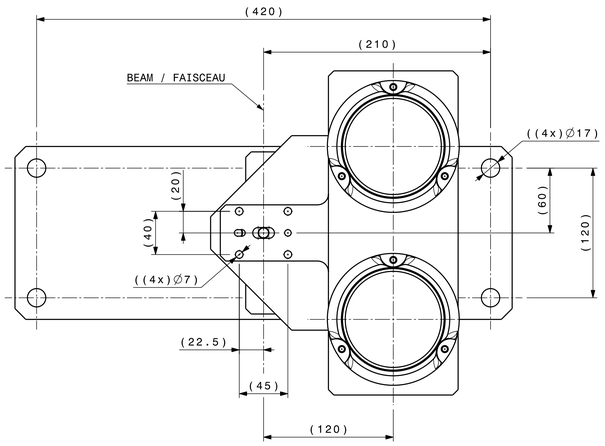

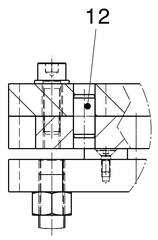

Détail C
Scale : 1:1

QUANT	DESCRIPTION	POS	MAT.	OBSERVATIONS	REF.CERN
3	Hex. skt. cnt. hd flat srew M4x10 Vis à tête coniq. 6P creux M4x10	18	Cr Ni 18 12 Mo (Ac.In.A4-70)		47.62.42 030.0
3	SOCKET HEAD SCREW M8 x25 VIS CHC M8 x 25	17	ST. STEEL A4-70 AC. INOX A4-70		47.62.71 310.4
1	HEXAGONALSCREW M10x35 VIS HEXAGONALE M10x35	16	ST. STEEL A4-316 AC. INOX A4-316		47.62.82 362.3
3	SOCKET HEAD SCREW M8 x 35 VIS CHC M8 x 35	15	ST. STEEL A4-70 AC. INOX A4-70		47.62.71 312.2
3	THREADED ROD M12 TIGE FILETÉE M12	14	ST.STEEL AC. INOX	Lg = 120 mm	47.38.77 120.9
9	HEXAGONAL NUT M12 0.8d ECROU HEXAGONAL M12 0.8d	13	ST. STEEL A4-70 AC. INOX A4-70		47.43.77 120.2
7	REC.HARD.SILV.S.CY.PIN Ø10 x 20 GOUP.CYL.AC. AG TR.REC. Ø10 x 20	12	ST.STEEL 304L AC. INOX 304L		47.74.96 804.8
6	PLAIN WASHER M8 RONDELLE PLATE M8	11	ST. STEEL AC. INOX		47.78.15 008.8
6	CONCAVE / CONVEX WASHERS M12 RONDELLES CONCAVE / CONVEXE M12	10	ST. STEEL AC. INOX		
		9			
1	PICK-UP SUPPORT - BASE PLATE SUPPORT PICK-UP - PLAQUE DE BASE	8		CTFBIPU_0048	
1	PICK-UP SUPPORT - UPPER PLATE SUPPORT PICK-UP - PLAQUE SUPERIEURE	7		CTFBIPU_0041	
1	PICK-UP SUPPORT - LOWER PLATE SUPPORT PICK-UP - PLAQUE INFERIEURE	6		CTFBIPU_0040	
1	PICK-UP SUPPORT - ALIGNMENT SUPPORT SUPPORT PICK-UP - SUPPORT ALIGNEMENT	5		CTFBIPU_0039	
1	PICK-UP SUPPORT - PILLAR SUPPORT PICK-UP - PILIER	4		CTFBIPU_0038	
1	SUPPORT ASSEMBLY QL-QS - SPECIAL WASHER ENSEMBLE SUPPORT QL-QS - RONDELLE SPECIALE	3		CTFMQUA_0024	
2	REFERENCE SOCKET ASSEMBLY (CASTING SIX EXECUTION) BLOC D'ALIGNEMENT KOR (ENSEMBLE (VARIANTE FONDERIE COQUILLE)	2		LHCGIMSA0002	
3	SUPPORT ASSEMBLY QL-QS - WASHER ENSEMBLE SUPPORT QL-QS - PATIN	1		CTFMQUA_0019	

ENS/ASS — S.ENS/S.ASS — CTFBIPU_0045/0047

CTF INDUCTIVE PICK-UP

PICK-UP ASSEMBLY
SUPPORT
ENSEMBLE PICK-UP
SUPPORT

ECHELLE / SCALE 1:2 — DES./DRA. ACROTECNA 2007-08-01 — CONTROLLED — RELEASED — APPROVED

CTF\BIPU_O\CTFBIPU_0046

REMPLACE/REPLACES

NON VALABLE POUR EXECUTION
NOT VALID FOR EXECUTION

QAC - CTFBIPU_0046 — SIZE 0 — IND.

DESSIN NON MODIFIER, TOLERANCES ACCORDING TO ISO 2768-m
DRAWING NOT MODIFY, TOLERANCES ACCORDING TO ISO STANDARDS

PROJECTION

ORGANISATION EUROPEENNE POUR LA RECHERCHE NUCLEAIRE
EUROPEAN ORGANIZATION FOR NUCLEAR RESEARCH
CERN - CH

CE DOCUMENT EST LA PROPRIETE DU CERN. IL NE PEUT ETRE COMMUNIQUE SANS AUTORISATION ECRITE
THIS DOCUMENT IS THE PROPERTY OF CERN. NO PART MAY BE REPRODUCED OR COMMUNICATED WITHOUT WRITTEN PERMISSION