REVISIONS			
REV.	DESCRIPTION	DATE	APPROVED

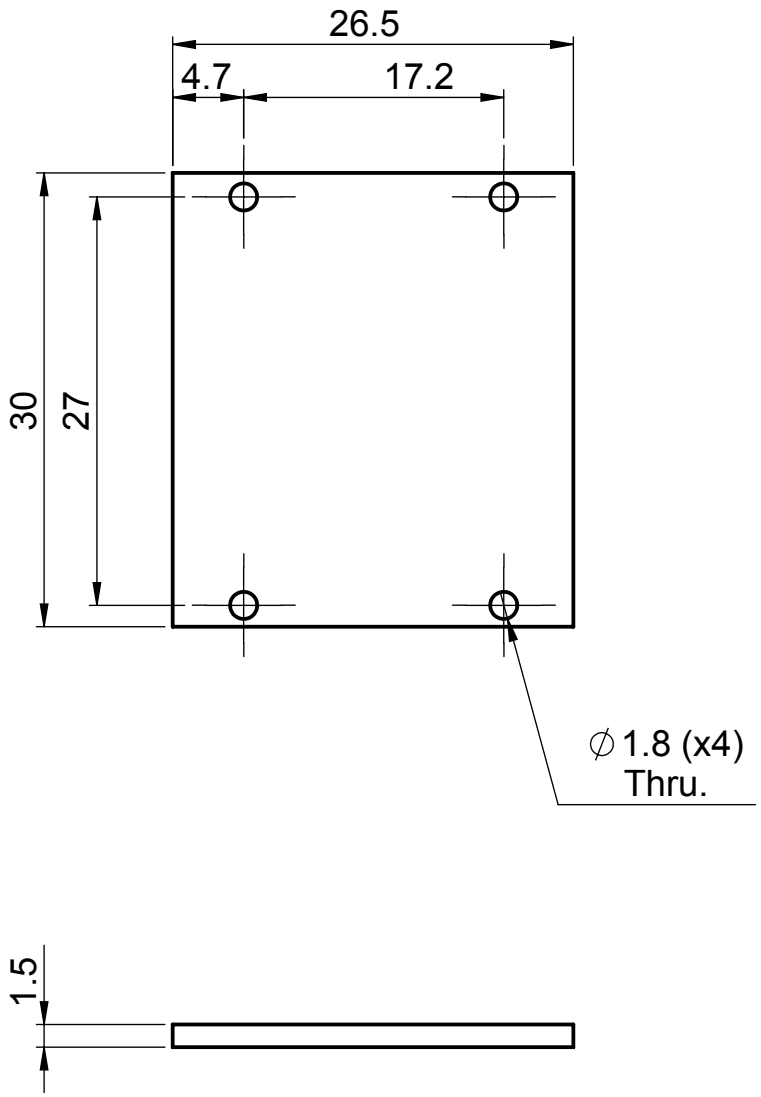

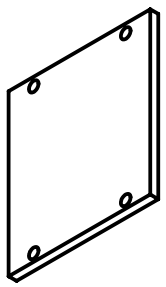

NR	PCS	MATERIAL	PART	DESCRIPTION
1	1	AW6082	FILTER_SUPPORT_GROOVE_PLATE	-

DRAWN BY	CHECKED	APPROVED	OWNER	PROJ. TYPE		
M.N	N.J	-	R.R		DEBUR AND BREAK SHARP EDGES	DO NOT SCALE DRAWING

UPPSALA UNIVERSITET

CAI
CENTER FOR ACCELERATOR AND INSTRUMENT DEVELOPMENT

TOLERANCES	PROJECT				
ISO-2768-mK	**TBTS MTV**				
ROUGHNESS	TITLE				
Ra 3.2	**FILTER SUPPORT GROOVE PLATE**				
SCALE	DRAWING NO.	REVISION	RELEASE DATE	SHEET	SIZE
2:1	**901-022**	**A**	10.03.09	1 of 1	A4

This document must not be copied without our written permission, and the contents thereof must not be imparted to a third part nor be used for any unauthorized purpose. Contravention will be prosecuted.