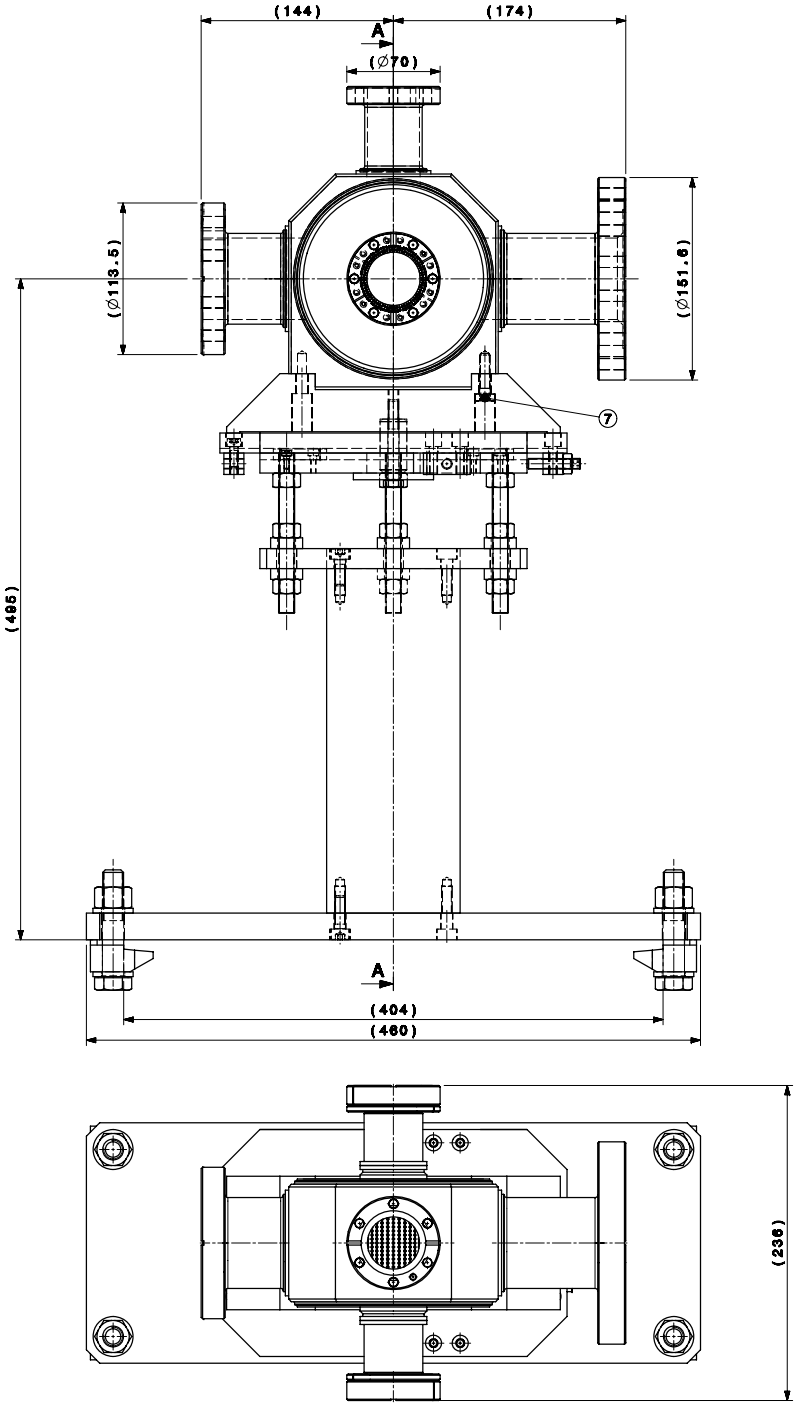

Coupe A-A

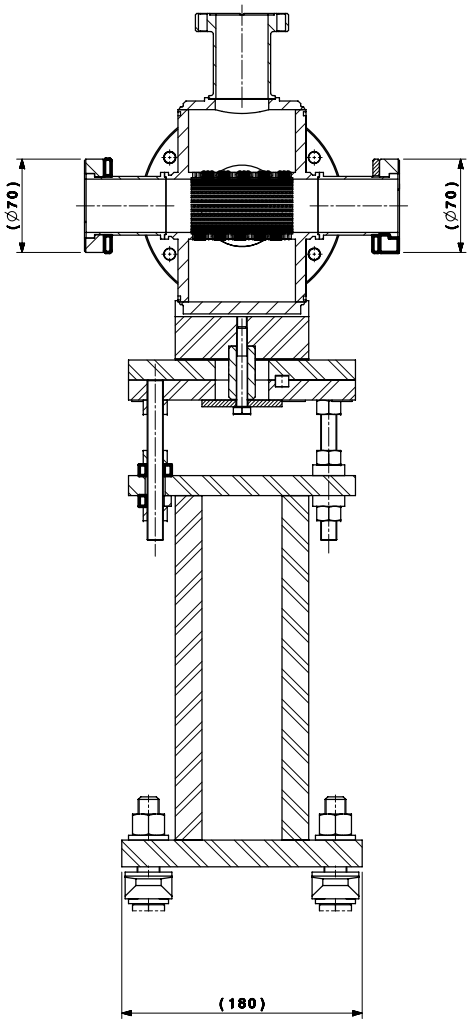

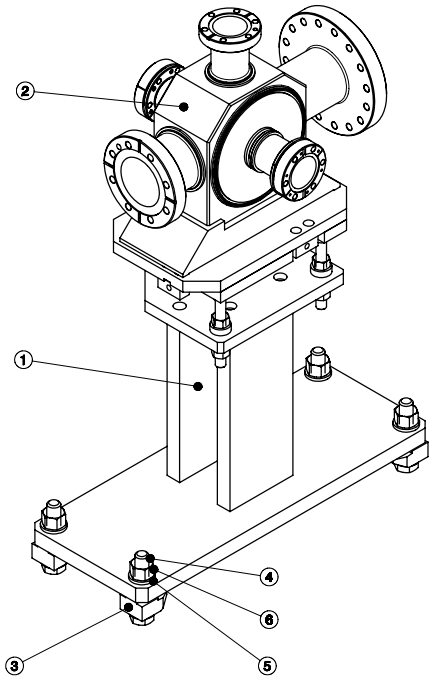

Masse:17kg
Mass

QUANT.	DESCRIPTION	POS	MAT.	OBSERVATIONS	REF.CERN
3	SOCK. HEAD SCREW M8 x 25	7	ST. STEEL A4		47.62.71
	VIS CHC M8 x 25		AC. INOX A4		310.4
4	HEXAGONAL NUT M16	6	STEEL		47.41.65
	ECROU HEXAGONAL M16		ACIER		160.8
8	PLAIN WASHER M16x30	5	ST. 60 Z		47.78.12
	ROND. PLATE M16x30		AC. 60 Z		160.3
4	HEXAGONAL SCREW M16	4	BOSSARD BN57		
	VIS A TETE CYLINDRIQUE M16				
4	FLAT TOP FIXING	3	STEEL	LINDAPTER TYPE "S" - S16M	
	CRAPAUD		ACIER		
1	PUMPING POT ASSEMBLY - ALU PUMPING POT	2		CTFVGPUM0060	
	ENSEMBLE POT DE POMPAGE - POT DE POMPAGE ALU				
1	ALU PUMPING POT - SUPPORT	1		CTFVGPUM0044	
	POT DE POMPAGE ALU - SUPPORT				
	ENG/ASS		S.ENG/S.ASS		

CTF3 VACUUM - GENERAL PUMPING

ALU PUMPING POT ASSEMBLY
POT DE POMPAGE ALU ENSEMBLE

ECHELLE SCALE 1:2	DES/DRA.	B.FAVRAT 2007-09-11
	CONTROLLED	N.CHRITIN 2007-09-11
	RELEASED	R.RUBER 2007-09-11
	APPROVED	- -

CTF\VGPUMD\CTFVGPUM0061

REPLACE/REPLACES

RELEASED BY PROJECT ENGINEER | FOR EXECUTION | QAC – | CTFVGPUM0061 | SIZE 1 | INV.

TOLERANCES GEOMETRIQUES: ISO 2768-mK-E
DIMENSIONS LINEAIRES et ANGULAIRES: ISO 13715
ARETES DE FORME NON DEFINIES

DESSIN, RUGOSITE, TOLERANCES DE FORME NORME ISO
DRAWING, SURFACE FINISH AND GEOMETRICAL TOLERANCES ACCORDING TO ISO STANDARDS

PROJECTION

REPRODUCTION INTERDITE SANS AUTORISATION ECRITE DU CERN
REPRODUCTION WITHOUT WRITTEN PERMISSION FROM CERN IS PROHIBITED

Ce dessin ne peut être utilisé à des fins commerciales sans autorisation écrite
This drawing may not be used for commercial purposes without written permission